LIST OF MATERIAL				
QTY.	ITEM NO.	DRAWING NO.	DESCRIPTION	MATERIAL
1	1		1/2 X 10 1/4 X 10 1/2	ALUM.
2	2		.250 DIA. X 1 1/8 LG. BAR STK.	304 S.S.
2	3	NOT SHOWN	1/4–20 SET SCR, 3/4 LG. WITH NYLON TIP; McMAST. CARR #90291A540	18–8 S.S.
2	4	NOT SHOWN	1/4 DIA. X 5/8 LG. SHLDR. SCR.; McMAST. CARR 90298A539	18–8 S.S.

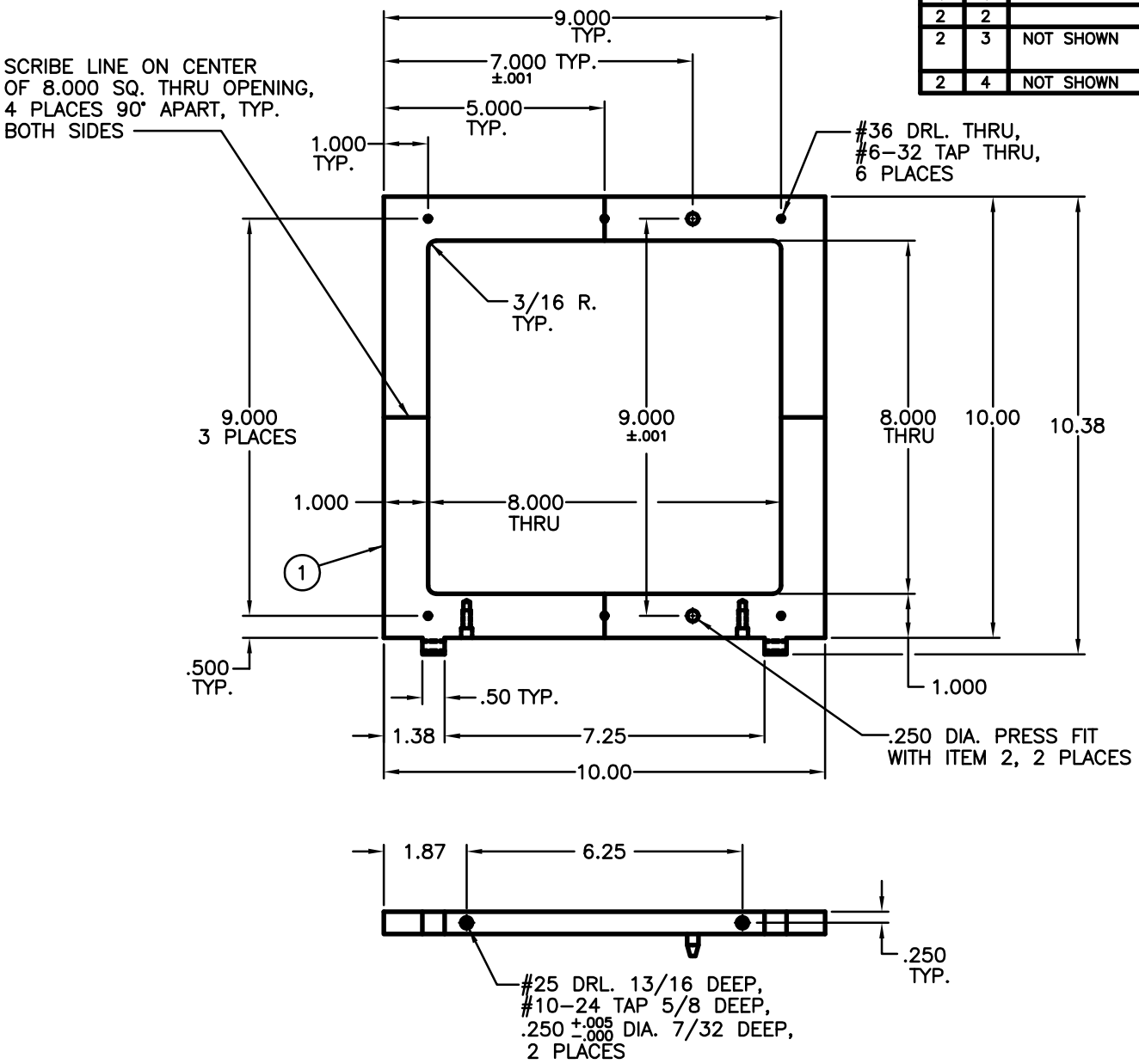

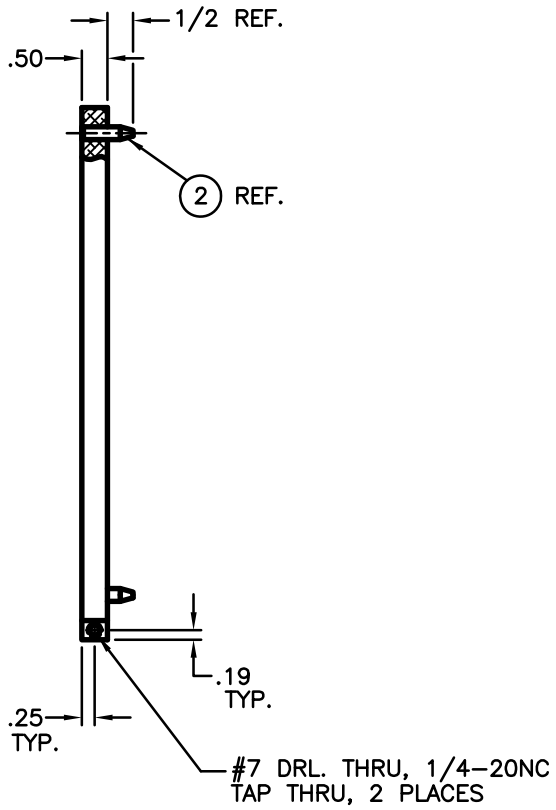

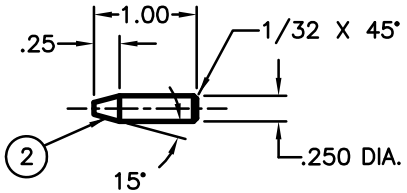

SCALE: 1 = 1

NO.	REVISION	DATE	CHK'D	APP'D

CYCLOTRON INSTITUTE
TEXAS A&M UNIVERSITY
COLLEGE STATION • TEXAS • 77843–3366

NEXT ASSEMBLY

UNLESS OTHERWISE SPECIFIED
DECIMAL .XX ± .010 .XXX ± .005
FRACTIONAL ± 1/32 125 SURFACE FINISH PROJECTION
ANGULAR ±1°
REMOVE ALL BURRS AND SHARP EDGES

DRILLED HOLE TOLERANCES
.013 TO .136 +.002 −.001 .234 TO .750 +.005 −.001
.136 TO .234 +.003 −.001 .750 TO 2.000 +.010 −.002

DRAWN	W.D.	DATE 11/00
CHECKED		
APPROVED		
ENGR. APP'D		
RELEASE		
SCALE	1 = 2	
SHEET	1 OF 1	

TITLE
TARGET FRAME
SEE – LINE

POSITION LO

DWG. NO. C–K5–31–MM–500

REV.